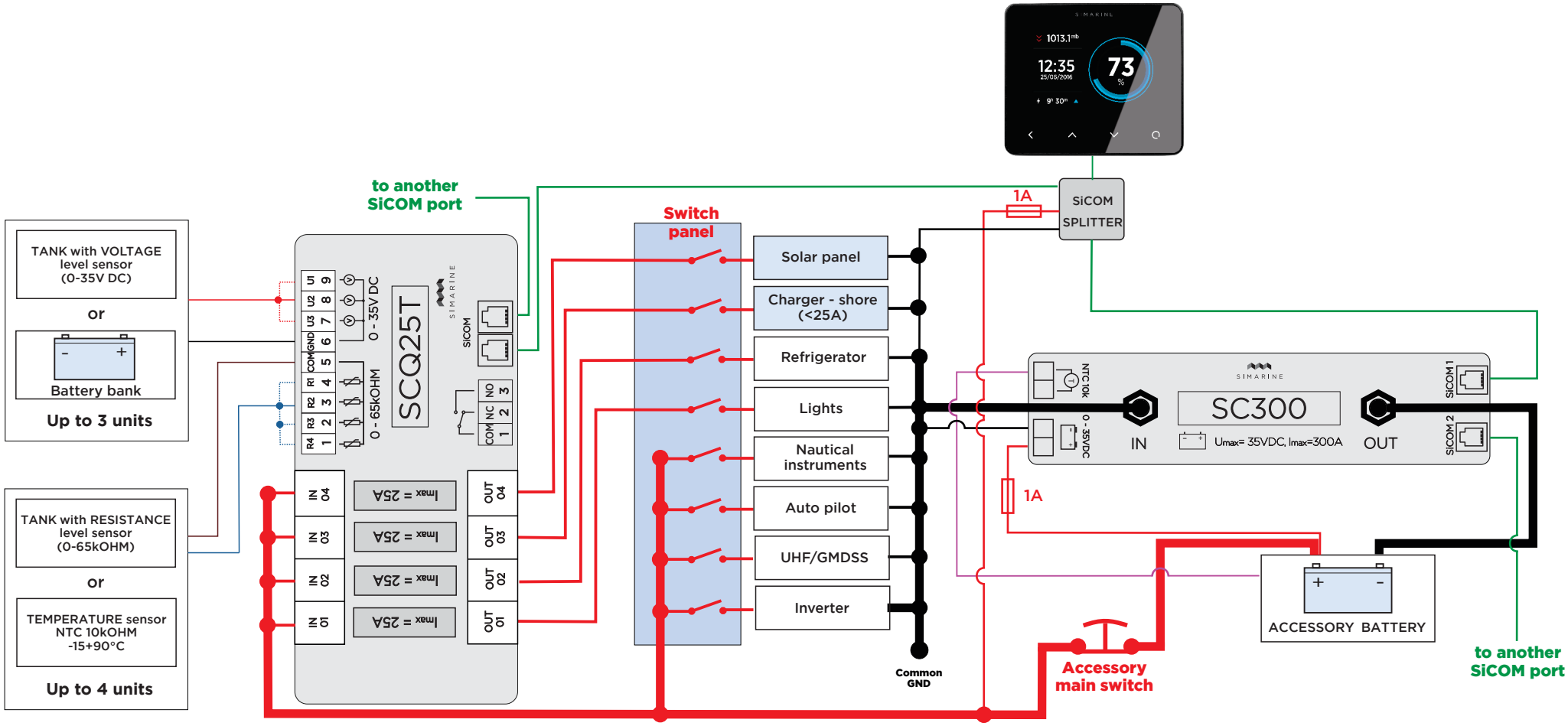
TANK with VOLTAGE level sensor (0-35V DC)
or
Battery bank
Up to 3 units
TANK with RESISTANCE level sensor (0-65kOHM)
or
TEMPERATURE sensor NTC 10kOHM -15+90°C
Up to 4 units
to another SiCOM port
SCQ25T
SIMARINE
SiCOM
0 - 35V DC
0 - 65kOHM
U1 9
U2 8
U3 7
GND 6
COM 5
R1 4
R2 3
R3 2
R4 1
NO 3
NC 2
COM 1
IN 04
IN 03
IN 02
IN 01
OUT 04
OUT 03
OUT 02
OUT 01
Imax = 25A
Imax = 25A
Imax = 25A
Imax = 25A
Switch panel
Solar panel
Charger - shore (<25A)
Refrigerator
Lights
Nautical instruments
Auto pilot
UHF/GMDSS
Inverter
Common GND
1A
SiCOM SPLITTER
1A
SIMARINE
SC300
NTC 10k
0 - 35VDC
IN
Umax= 35VDC, Imax=300A
OUT
SiCOM 1
SiCOM 2
ACCESSORY BATTERY
Accessory main switch
to another SiCOM port